REVISION RECORD				
REV	ECN	DESCRIPTION	DRFT	DATE
A	ECN09-0145	料号变更	Apple	12/01/06

active

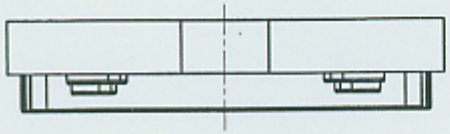

Notes:

1、Material:PA66,UL94V-0;
2、The burr must control within 0.05mm;
3、Cavity number of mould showed on the part;
4、Cosmetic surfaces couldn't showed
Deburring、Flash、Melting mark、shrinkage、
etc on the parts;
5、Function dimensions see symbol Ⓧ;
6、Undimensioned Tolerances:

Pitch range in mm			Naminal dimension range in mm					
to 8	over 8 to 16	over 16 to 24	to 6	over 6 to 30	over 30 to 90	over 90 to 200	over 200 to 480	
±0.08	±0.13	±0.18	±0.1	±0.2	±0.3	±0.5	±0.7	0.05/10

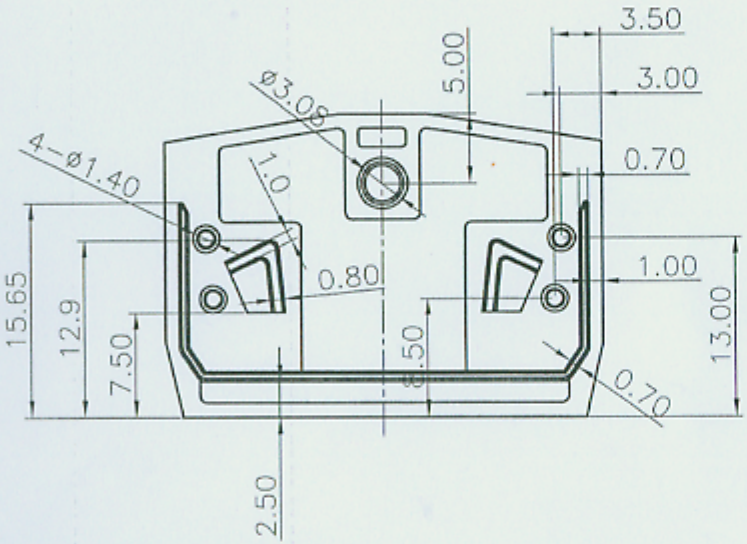

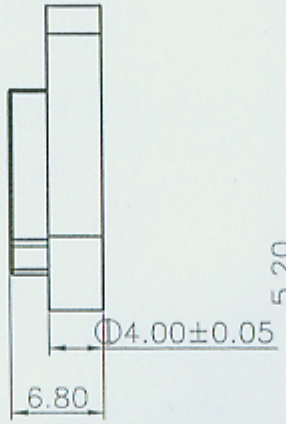

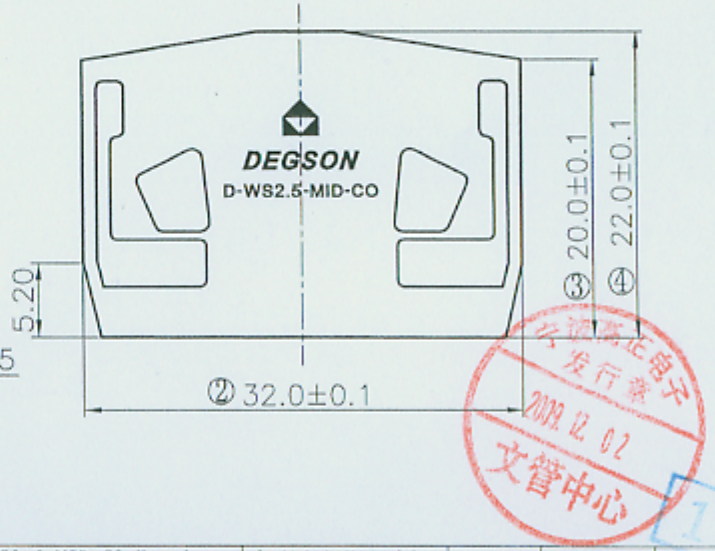

ITEM	NAME OF PART	NO. OF PART	Q'TY	MATERIAL	NOTES
1	D-WS2.5-MID-CO-Housing	△6160C0Y01A(H)	1	PA66	UL94V-0

DRFTD LTC DATE 06/06/07
CHKD DATE 12.1.07
APPD DATE
APPRL DATE 12/01/07
MATERIAL :
G.E :
FINISH :
SCALE : 1: 1
THIRD ANGLE PROJECTION

DEGSON ® 宁波高正电子有限公司 DEGSON ELECTRONICS CO., LTD

NAME: D-WS2.5-MID-CO-01P-1Y-00A(H)

DRAWING NO. D-WS2.5-MID-CO-B01
/PART NO.
SIZE A3
REV TI
DO NOT SCALE DRAWING
SHEET 1 OF 1

宁波高正电子 发行管理 2012.12.02 文管中心