FOR-1754 Rev.1.1

未注公差/General tolerances(mm)														
0 ~ 3	>3 ~ 6	>6 ~ 10	>10 ~ 18	>18 ~ 30	>30 ~ 50	>50 ~ 80	>80 ~ 120	>120 ~ 180	>180 ~ 250	>250 ~ 315	>315 ~ 400	>400 ~ 500	>500	0.1/10
±0.12	±0.18	±0.22	±0.26	±0.31	±0.37	±0.57	±0.80	±0.93	±1.05	±1.15	±1.60	±2.20	±2.50	±2°

active

未标尺寸请参考3D文件

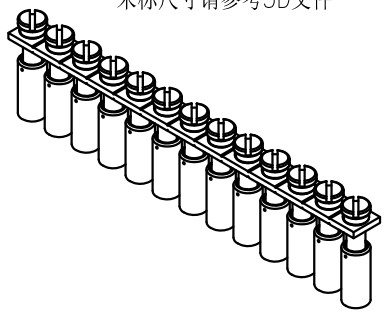

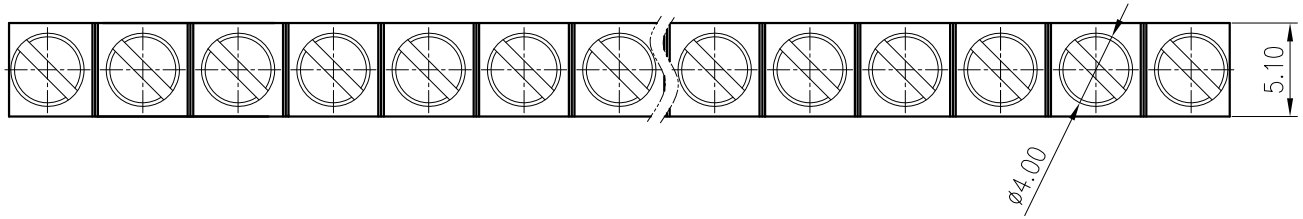

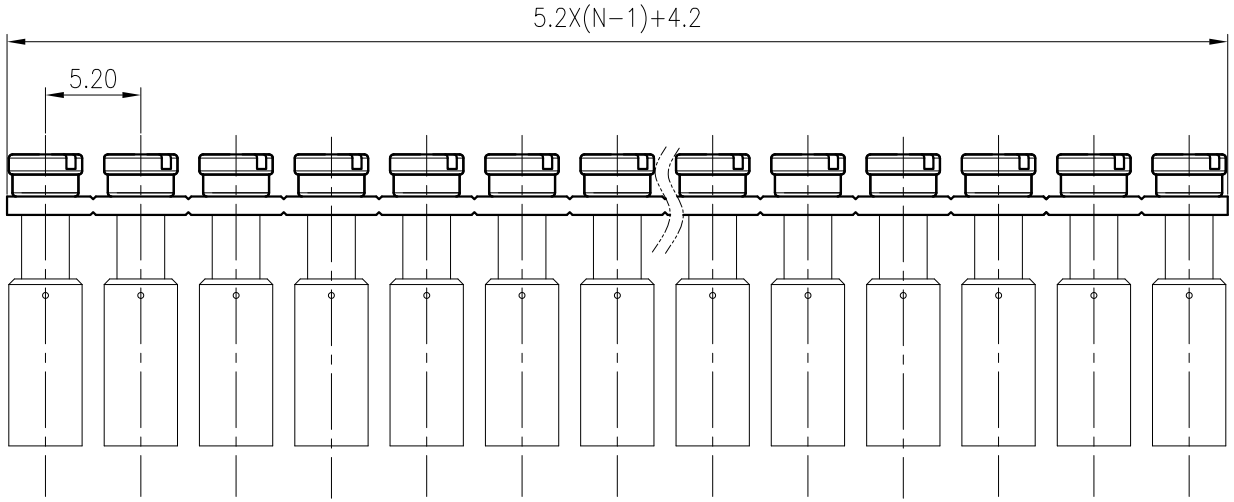

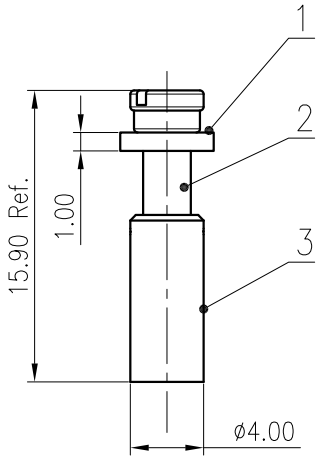

ITEM	NAME OF PART	MATERIAL	NOTES
3	Sleeve	Copper alloy	Ni plated
2	Screw	Copper alloy	Ni plated
1	Current carrier	Copper	Sn Plated

螺丝扭矩/Torque Tightening(N·m/Lb.in)	M3, 0.5/4.43
间距/Pitch(mm)/线数范围/Poles	5.20/N=02~13P
符合RoHS环保要求/Conform to RoHS	Yes

MATERIAL: /		SURFACE: /		
MAT NO.: /	DEGSON® 宁波高松电子有限公司 NINGBO DEGSON ELECTRICAL CO., LTD			
STATUS: /				
APPD:	NAME: FBRIXX-5-00A(H)			
CHKD:				
DRFT: Wang LX 2020.07.01	DRAWING NO.: 92000631		REV	T0
SIZE: A4 mm (inch)	TYPE: CUSTOMER DRAWING	SCALE: 2.5:1	SHEET	1/1

REV	ECN	DESCRIPTION	DRFT	DATE